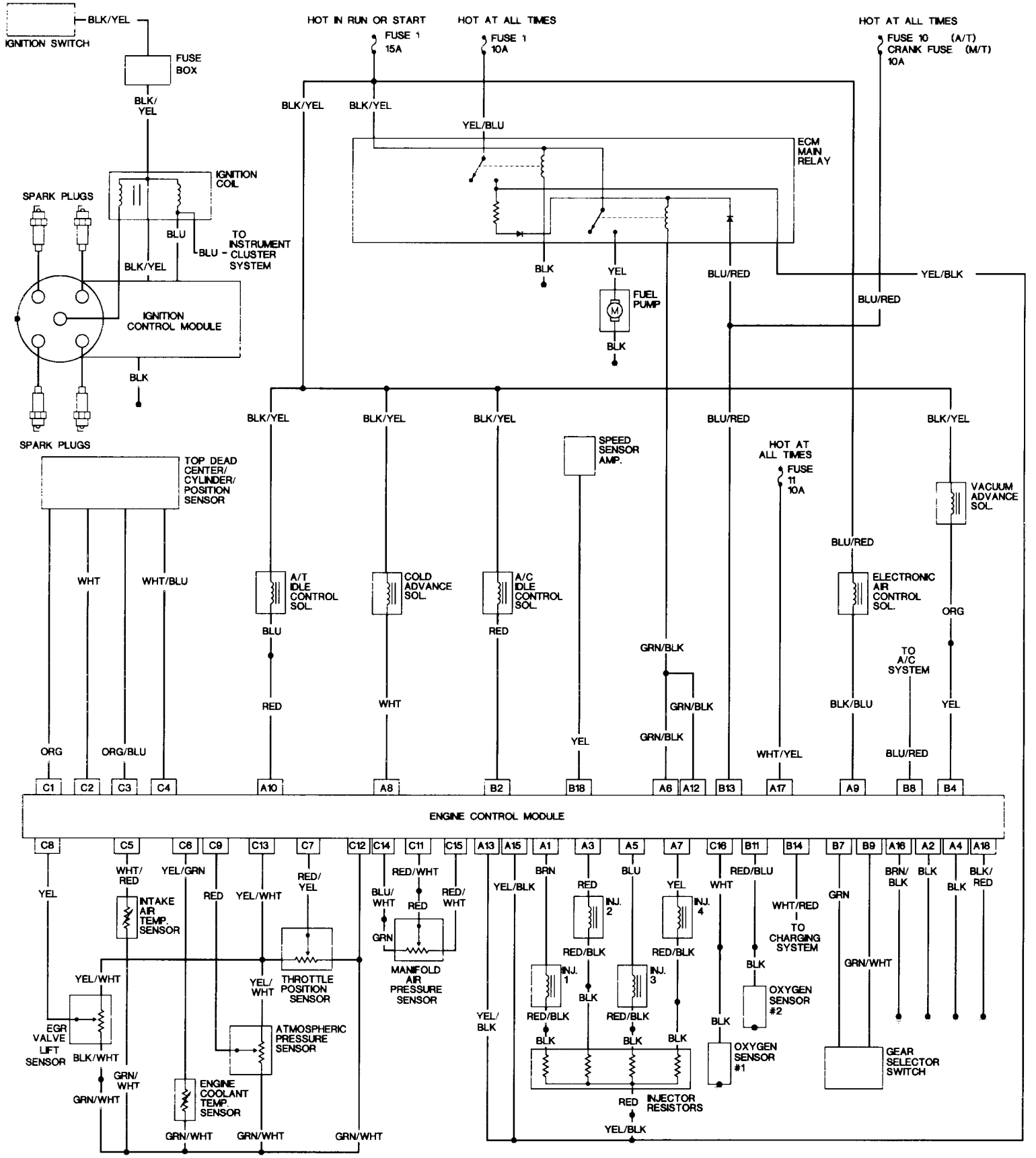
IGNITION SWITCH
BLK/YEL
FUSE BOX
BLK/YEL
IGNITION COIL
SPARK PLUGS
BLU
BLU - TO INSTRUMENT CLUSTER SYSTEM
BLK/YEL
IGNITION CONTROL MODULE
BLK
SPARK PLUGS
HOT IN RUN OR START
FUSE 1 15A
HOT AT ALL TIMES
FUSE 1 10A
HOT AT ALL TIMES
FUSE 10 (A/T)
CRANK FUSE (M/T)
10A
BLK/YEL
BLK/YEL
YEL/BLU
ECM MAIN RELAY
BLK
YEL
FUEL PUMP
BLK
BLU/RED
YEL/BLK
BLU/RED
BLK/YEL
BLK/YEL
BLK/YEL
BLU/RED
BLK/YEL
SPEED SENSOR AMP.
HOT AT ALL TIMES
FUSE 11 10A
VACUUM ADVANCE SOL.
TOP DEAD CENTER/ CYLINDER/ POSITION SENSOR
WHT
WHT/BLU
A/T IDLE CONTROL SOL.
COLD ADVANCE SOL.
A/C IDLE CONTROL SOL.
BLU/RED
ELECTRONIC AIR CONTROL SOL.
ORG
BLU
RED
WHT
RED
GRN/BLK
GRN/BLK
GRN/BLK
TO A/C SYSTEM
BLK/BLU
YEL
YEL
WHT/YEL
BLU/RED
ORG
ORG/BLU
C1
C2
C3
C4
A10
A8
B2
B18
A6
A12
B13
A17
A9
B8
B4
ENGINE CONTROL MODULE
C8
C5
C6
C9
C13
C7
C12
C14
C11
C15
A13
A15
A1
A3
A5
A7
C16
B11
B14
B7
B9
A16
A2
A4
A18
YEL
WHT/ RED
YEL/GRN
RED
YEL/WHT
RED/ YEL
RED/WHT
BLU/ WHT
RED
RED/ WHT
YEL/BLK
BRN
RED
BLU
YEL
WHT
RED/BLU
WHT/RED
GRN
BRN/ BLK
BLK
BLK
BLK/ RED
INTAKE AIR TEMP. SENSOR
GRN
INJ. 2
INJ. 4
TO CHARGING SYSTEM
RED/BLK
RED/BLK
BLK
GRN/WHT
YEL/WHT
THROTTLE POSITION SENSOR
MANIFOLD AIR PRESSURE SENSOR
INJ. 1
BLK
INJ. 3
OXYGEN SENSOR #2
YEL/ WHT
EGR VALVE LIFT SENSOR
BLK/WHT
ATMOSPHERIC PRESSURE SENSOR
YEL/ BLK
RED/BLK
RED/BLK
BLK
BLK
BLK
BLK
OXYGEN SENSOR #1
GEAR SELECTOR SWITCH
GRN/ WHT
GRN/WHT
ENGINE COOLANT TEMP. SENSOR
RED
INJECTOR RESISTORS
YEL/BLK
GRN/WHT
GRN/WHT
GRN/WHT