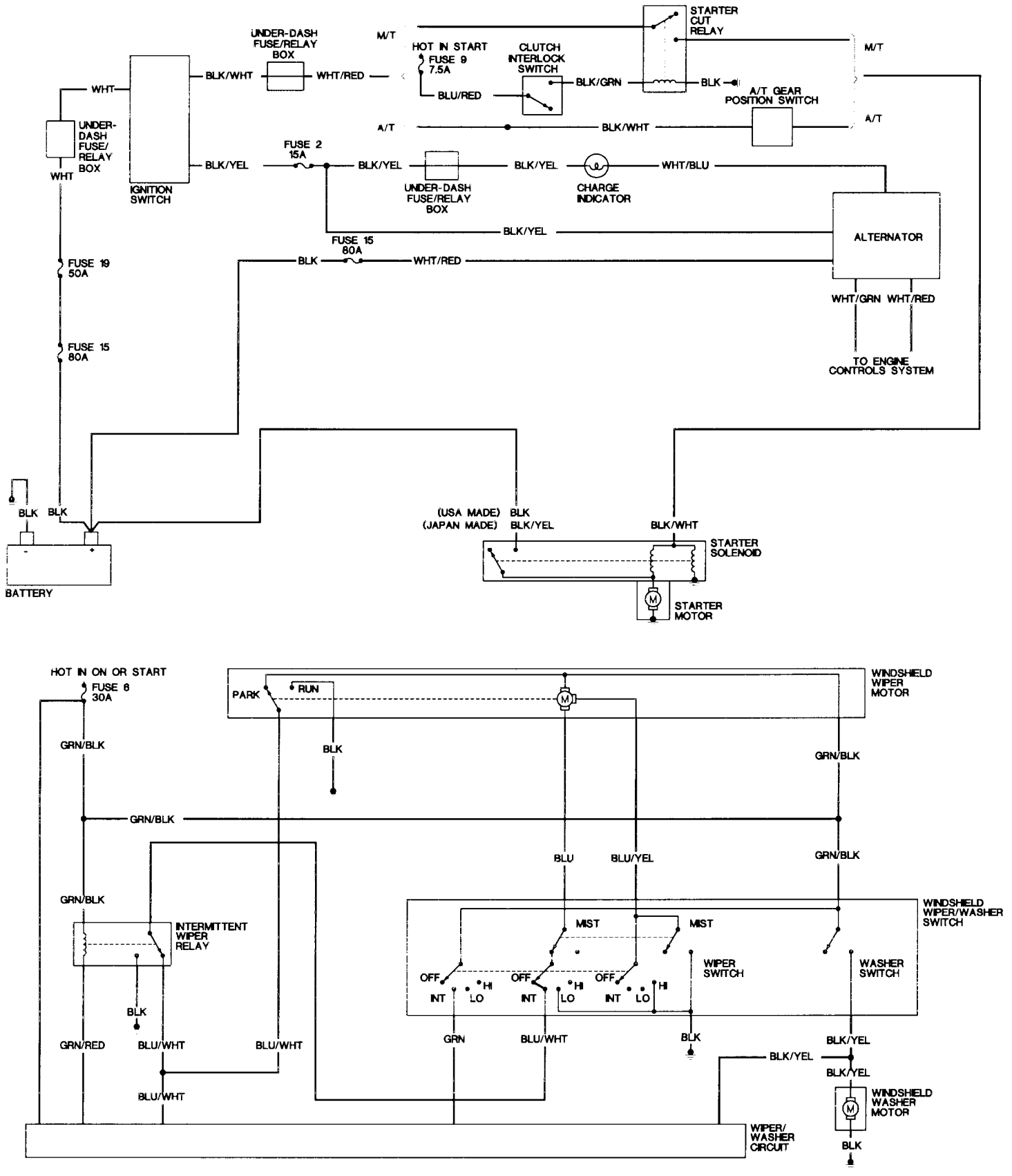
STARTER CUT RELAY
M/T
UNDER-DASH FUSE/RELAY BOX
HOT IN START
FUSE 9 7.5A
CLUTCH INTERLOCK SWITCH
BLK/GRN
BLK
A/T GEAR POSITION SWITCH
WHT
BLK/WHT
WHT/RED
BLU/RED
A/T
UNDER-DASH FUSE/RELAY BOX
WHT
IGNITION SWITCH
BLK/YEL
FUSE 2 15A
BLK/YEL
UNDER-DASH FUSE/RELAY BOX
CHARGE INDICATOR
WHT/BLU
ALTERNATOR
FUSE 15 80A
BLK
WHT/RED
FUSE 19 50A
FUSE 15 80A
WHT/GRN WHT/RED
TO ENGINE CONTROLS SYSTEM
BLK BLK
BATTERY
(USA MADE) BLK
(JAPAN MADE) BLK/YEL
BLK/WHT
STARTER SOLENOID
STARTER MOTOR
HOT IN ON OR START
FUSE 6 30A
PARK
RUN
WINDSHIELD WIPER MOTOR
GRN/BLK
BLK
GRN/BLK
GRN/BLK
BLU
BLU/YEL
GRN/BLK
GRN/BLK
INTERMITTENT WIPER RELAY
WINDSHIELD WIPER/WASHER SWITCH
MIST
MIST
WIPER SWITCH
WASHER SWITCH
OFF
HI
INT
LO
BLK
GRN/RED
BLU/WHT
BLU/WHT
GRN
BLU/WHT
BLK
BLK/YEL
BLK/YEL
BLK/YEL
BLU/WHT
WINDSHIELD WASHER MOTOR
WIPER/WASHER CIRCUIT
BLK