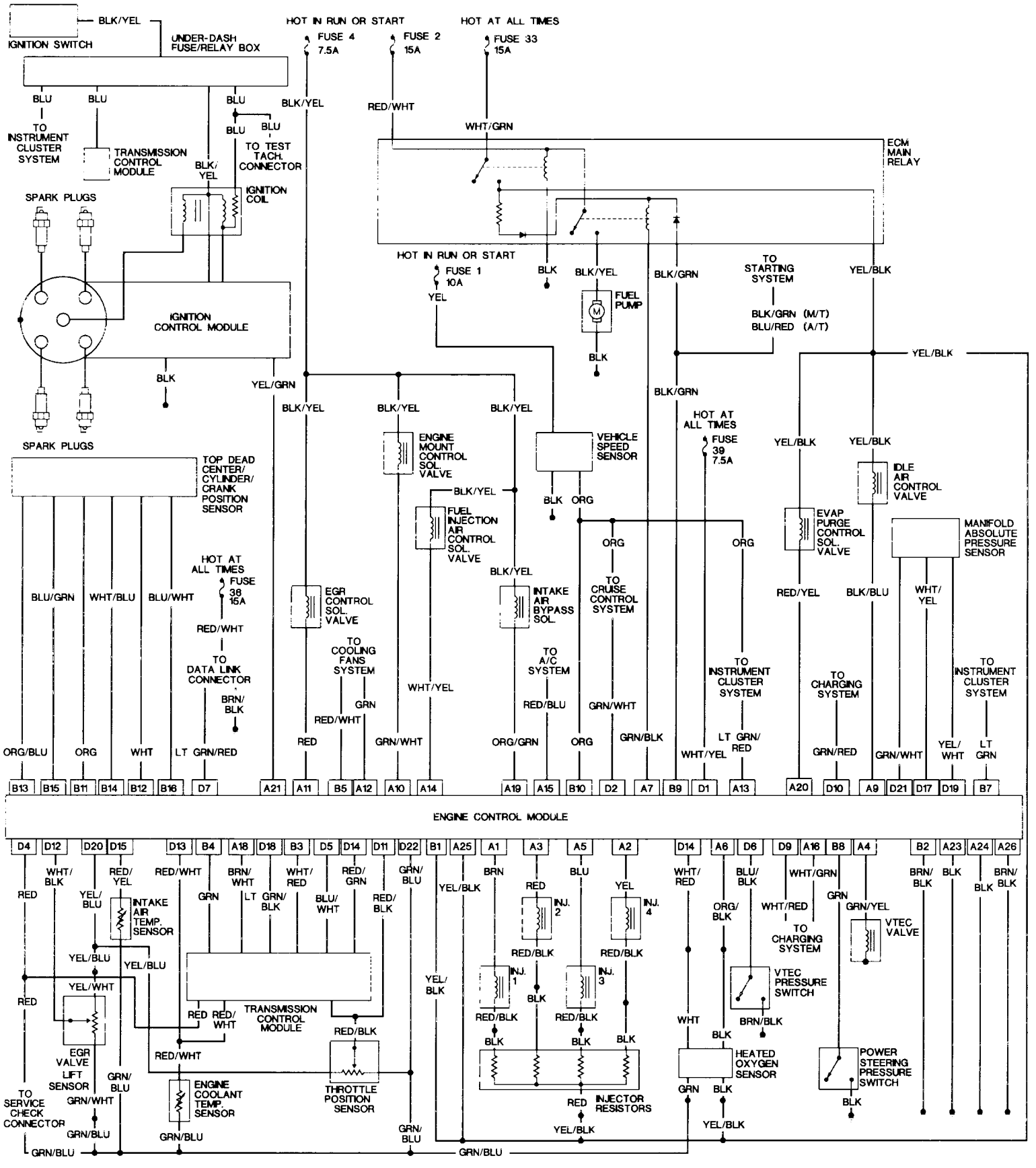
IGNITION SWITCH
BLK/YEL
UNDER-DASH FUSE/RELAY BOX
HOT IN RUN OR START
FUSE 4 7.5A
FUSE 2 15A
HOT AT ALL TIMES
FUSE 33 15A
BLU
TO INSTRUMENT CLUSTER SYSTEM
TRANSMISSION CONTROL MODULE
BLK/YEL
TO TEST TACH. CONNECTOR
RED/WHT
WHT/GRN
ECM MAIN RELAY
SPARK PLUGS
IGNITION COIL
HOT IN RUN OR START
FUSE 1 10A
YEL
BLK
BLK/YEL
FUEL PUMP
BLK/GRN
TO STARTING SYSTEM
YEL/BLK
BLK/GRN (M/T)
BLU/RED (A/T)
IGNITION CONTROL MODULE
BLK
YEL/GRN
BLK/YEL
BLK/YEL
BLK/YEL
BLK/GRN
HOT AT ALL TIMES
FUSE 39 7.5A
YEL/BLK
YEL/BLK
SPARK PLUGS
TOP DEAD CENTER/ CYLINDER/ CRANK POSITION SENSOR
ENGINE MOUNT CONTROL SOL. VALVE
VEHICLE SPEED SENSOR
IDLE AIR CONTROL VALVE
BLK/YEL
FUEL INJECTION AIR CONTROL SOL. VALVE
BLK
ORG
EVAP PURGE CONTROL SOL. VALVE
MANIFOLD ABSOLUTE PRESSURE SENSOR
ORG
ORG
HOT AT ALL TIMES
FUSE 38 15A
BLU/GRN
WHT/BLU
BLU/WHT
EGR CONTROL SOL. VALVE
BLK/YEL
INTAKE AIR BYPASS SOL.
TO CRUISE CONTROL SYSTEM
RED/YEL
BLK/BLU
WHT/ YEL
RED/WHT
TO DATA LINK CONNECTOR
TO COOLING FANS SYSTEM
TO A/C SYSTEM
TO INSTRUMENT CLUSTER SYSTEM
TO CHARGING SYSTEM
TO INSTRUMENT CLUSTER SYSTEM
BRN/ BLK
GRN
WHT/YEL
RED/WHT
RED/BLU
GRN/WHT
ORG/BLU
ORG
WHT
LT GRN/RED
RED
GRN/WHT
ORG/GRN
ORG
GRN/BLK
WHT/YEL
LT GRN/ RED
GRN/RED
GRN/WHT
YEL/ WHT
LT GRN
B13 B15 B11 B14 B12 B16 D7 A21 A11 B5 A12 A10 A14 A19 A15 B10 D2 A7 B9 D1 A13 A20 D10 A9 D21 D17 D19 B7
ENGINE CONTROL MODULE
D4 D12 D20 D15 D13 B4 A18 D18 B3 D5 D14 D11 D22 B1 A25 A1 A3 A5 A2 D14 A6 D6 D9 A16 B8 A4 B2 A23 A24 A26
RED
WHT/ BLK
YEL/ BLU
RED/ YEL
INTAKE AIR TEMP. SENSOR
RED/WHT
GRN
BRN/ WHT
LT GRN/ BLK
WHT/ RED
BLU/ WHT
RED/ GRN
RED/ BLK
GRN/ BLU
YEL/BLK
BRN
RED
INJ. 2
BLU
YEL
INJ. 4
WHT/ RED
ORG/ BLK
BLU/ BLK
WHT/GRN
WHT/RED
TO CHARGING SYSTEM
GRN
GRN/YEL
VTEC VALVE
BRN/ BLK
BLK
BRN/ BLK
BLK
YEL/BLU
YEL/BLU
YEL/ BLK
RED/BLK
RED/BLK
INJ. 1
INJ. 3
VTEC PRESSURE SWITCH
YEL/WHT
RED
RED
RED/ WHT
TRANSMISSION CONTROL MODULE
RED/BLK
RED/BLK
BLK
BLK
WHT
BRN/BLK
BLK
BLK
BLK
EGR VALVE LIFT SENSOR
RED/WHT
HEATED OXYGEN SENSOR
POWER STEERING PRESSURE SWITCH
GRN/ BLU
ENGINE COOLANT TEMP. SENSOR
THROTTLE POSITION SENSOR
INJECTOR RESISTORS
TO SERVICE CHECK CONNECTOR
GRN/WHT
GRN/BLU
GRN/BLU
GRN/BLU
RED
YEL/BLK
GRN
BLK
YEL/BLK
BLK
GRN/BLU
GRN/BLU
GRN/BLU