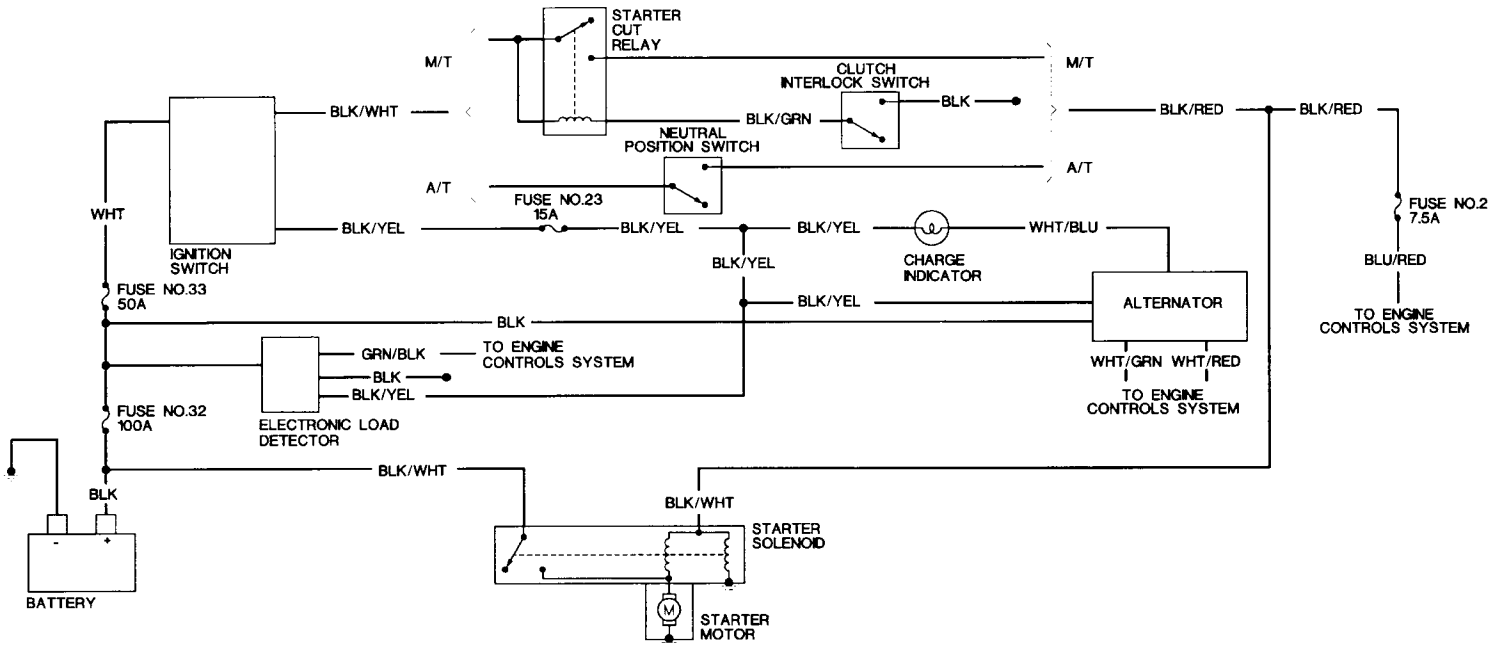
STARTER CUT RELAY
M/T
M/T
CLUTCH INTERLOCK SWITCH
BLK
BLK/WHT
BLK/GRN
BLK/RED
BLK/RED
NEUTRAL POSITION SWITCH
A/T
A/T
FUSE NO.23 15A
WHT
BLK/YEL
BLK/YEL
BLK/YEL
WHT/BLU
FUSE NO.2 7.5A
IGNITION SWITCH
BLK/YEL
CHARGE INDICATOR
BLU/RED
FUSE NO.33 50A
BLK/YEL
ALTERNATOR
BLK
TO ENGINE CONTROLS SYSTEM
GRN/BLK
TO ENGINE CONTROLS SYSTEM
BLK
BLK/YEL
WHT/GRN WHT/RED
TO ENGINE CONTROLS SYSTEM
FUSE NO.32 100A
ELECTRONIC LOAD DETECTOR
BLK/WHT
BLK
BLK/WHT
STARTER SOLENOID
BATTERY
STARTER MOTOR

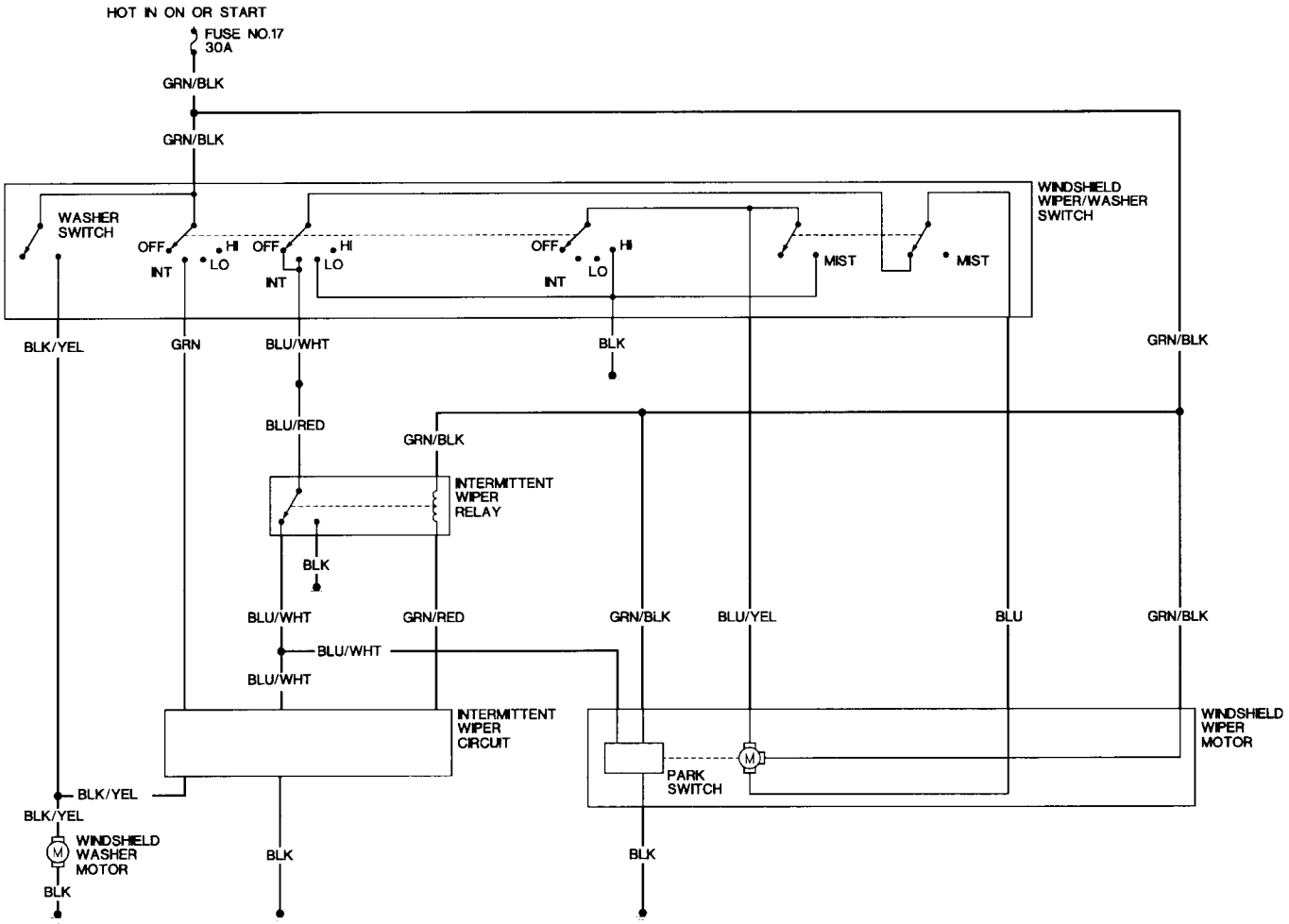
HOT IN ON OR START
FUSE NO.17 30A
GRN/BLK
GRN/BLK
WINDSHIELD WIPER/WASHER SWITCH
WASHER SWITCH
OFF
HI
LO
INT
OFF
HI
LO
INT
OFF
HI
LO
INT
MIST
MIST
BLK/YEL
GRN
BLU/WHT
BLK
GRN/BLK
BLU/RED
GRN/BLK
INTERMITTENT WIPER RELAY
BLK
BLU/WHT
GRN/RED
GRN/BLK
BLU/YEL
BLU
GRN/BLK
BLU/WHT
BLU/WHT
INTERMITTENT WIPER CIRCUIT
WINDSHIELD WIPER MOTOR
PARK SWITCH
BLK/YEL
BLK/YEL
WINDSHIELD WASHER MOTOR
BLK
BLK
BLK
BLK