1988-91 CHEROKEE/COMANCHE/WAGONEER CHASSIS SCHEMATICS

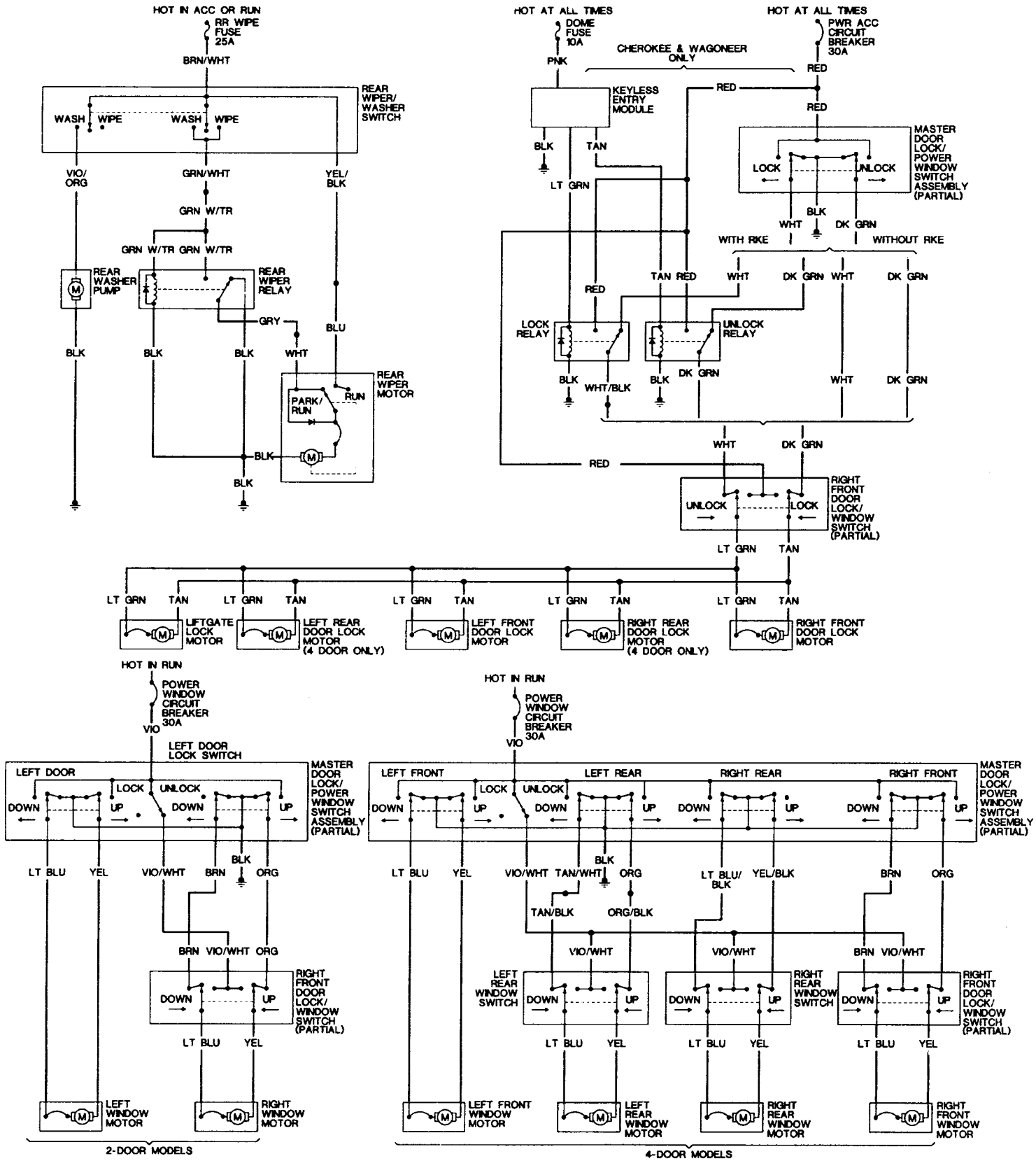

DIAGRAM 19