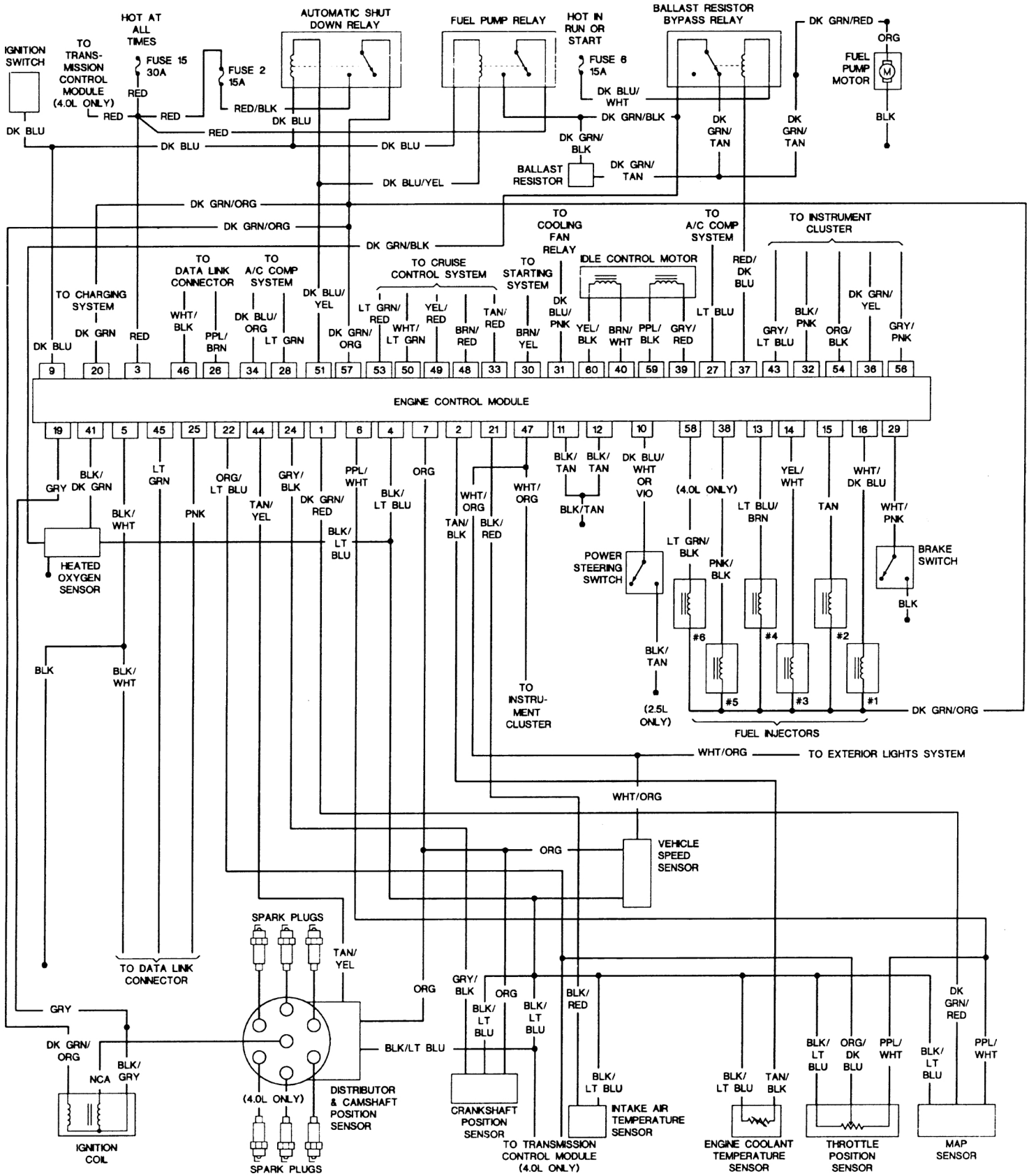
IGNITION SWITCH
DK BLU
TO TRANS-MISSION CONTROL MODULE (4.0L ONLY)
HOT AT ALL TIMES
FUSE 15 30A
RED
FUSE 2 15A
RED/BLK
AUTOMATIC SHUT DOWN RELAY
FUEL PUMP RELAY
HOT IN RUN OR START
FUSE 6 15A
DK BLU/WHT
BALLAST RESISTOR BYPASS RELAY
DK GRN/RED
ORG
FUEL PUMP MOTOR
BLK
DK GRN/BLK
DK GRN/TAN
DK GRN/BLK
BALLAST RESISTOR
DK BLU/YEL
DK GRN/ORG
TO COOLING FAN RELAY
TO A/C COMP SYSTEM
TO INSTRUMENT CLUSTER
TO DATA LINK CONNECTOR
TO A/C COMP SYSTEM
TO CRUISE CONTROL SYSTEM
TO STARTING SYSTEM
IDLE CONTROL MOTOR
TO CHARGING SYSTEM
ENGINE CONTROL MODULE
HEATED OXYGEN SENSOR
POWER STEERING SWITCH
BRAKE SWITCH
TO INSTRU-MENT CLUSTER
(2.5L ONLY)
FUEL INJECTORS
WHT/ORG
TO EXTERIOR LIGHTS SYSTEM
VEHICLE SPEED SENSOR
SPARK PLUGS
TO DATA LINK CONNECTOR
DISTRIBUTOR & CAMSHAFT POSITION SENSOR
(4.0L ONLY)
IGNITION COIL
CRANKSHAFT POSITION SENSOR
TO TRANSMISSION CONTROL MODULE (4.0L ONLY)
INTAKE AIR TEMPERATURE SENSOR
ENGINE COOLANT TEMPERATURE SENSOR
THROTTLE POSITION SENSOR
MAP SENSOR

DIAGRAM 23