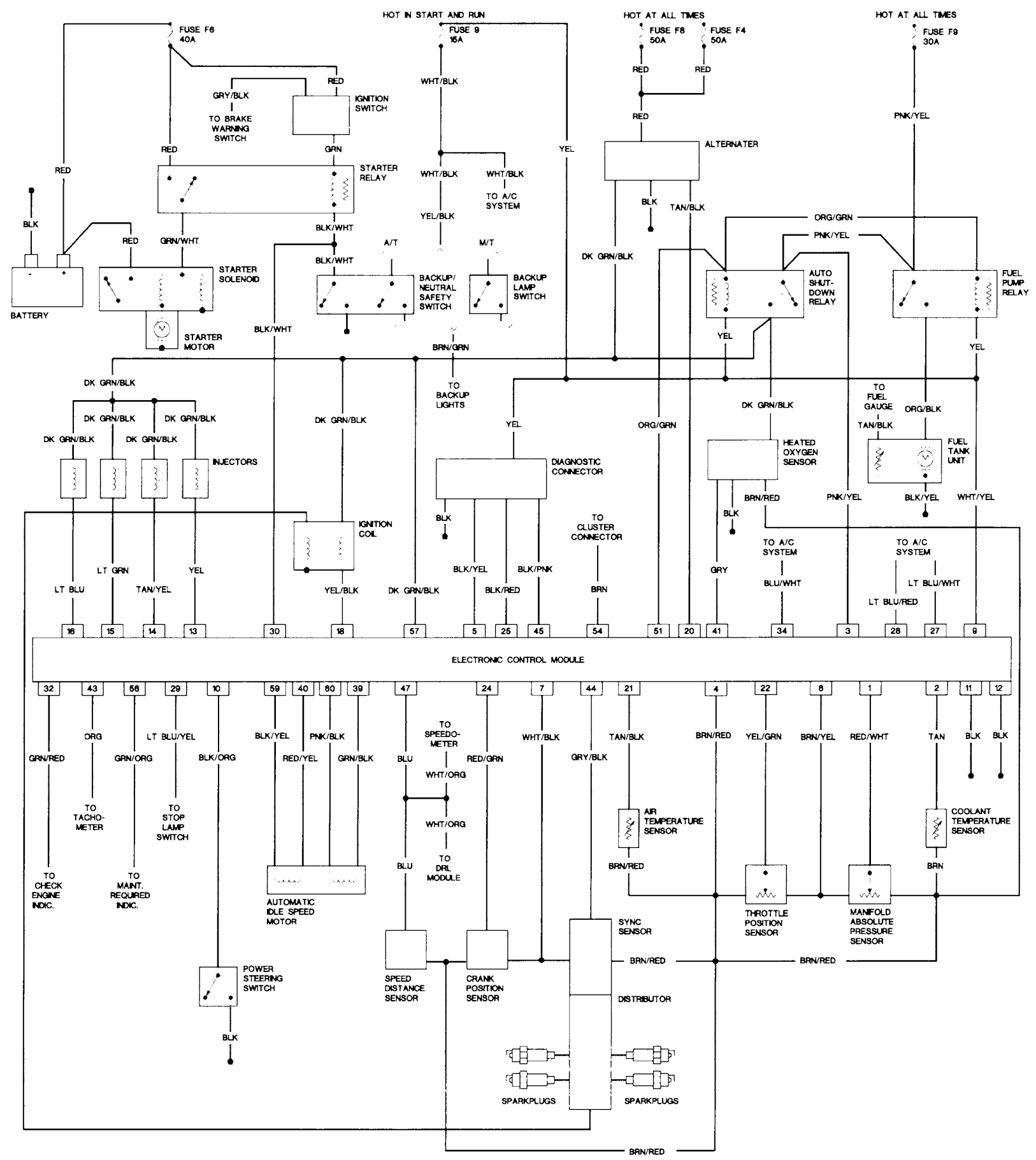
HOT IN START AND RUN
HOT AT ALL TIMES
HOT AT ALL TIMES
FUSE F6 40A
FUSE 9 15A
FUSE F8 50A
FUSE F4 50A
FUSE F9 30A
RED
WHT/BLK
RED
RED
RED
PNK/YEL
GRY/BLK
TO BRAKE WARNING SWITCH
IGNITION SWITCH
RED
GRN
STARTER RELAY
WHT/BLK
WHT/BLK
TO A/C SYSTEM
YEL/BLK
YEL
ALTERNATER
BLK
TAN/BLK
ORG/GRN
PNK/YEL
RED
BLK
RED
GRN/WHT
BLK/WHT
A/T
M/T
BLK/WHT
DK GRN/BLK
STARTER SOLENOID
BATTERY
BACKUP/ NEUTRAL SAFETY SWITCH
BACKUP LAMP SWITCH
AUTO SHUT-DOWN RELAY
FUEL PUMP RELAY
STARTER MOTOR
BLK/WHT
BRN/GRN
YEL
YEL
DK GRN/BLK
TO BACKUP LIGHTS
DK GRN/BLK
DK GRN/BLK
DK GRN/BLK
DK GRN/BLK
DK GRN/BLK
DK GRN/BLK
YEL
ORG/GRN
TO FUEL GAUGE
TAN/BLK
ORG/BLK
INJECTORS
DIAGNOSTIC CONNECTOR
HEATED OXYGEN SENSOR
FUEL TANK UNIT
BRN/RED
PNK/YEL
BLK/YEL
WHT/YEL
BLK
BLK
IGNITION COIL
TO CLUSTER CONNECTOR
TO A/C SYSTEM
TO A/C SYSTEM
LT GRN
YEL
BLK/YEL
BLK/PNK
GRY
LT BLU
TAN/YEL
YEL/BLK
DK GRN/BLK
BLK/RED
BRN
BLU/WHT
LT BLU/WHT
LT BLU/RED
16
15
14
13
30
18
57
5
25
45
54
51
20
41
34
3
28
27
9
ELECTRONIC CONTROL MODULE
32
43
56
29
10
59
40
60
39
47
24
7
44
21
4
22
8
1
2
11
12
GRN/RED
ORG
LT BLU/YEL
BLK/YEL
PNK/BLK
TO SPEEDO-METER
WHT/BLK
TAN/BLK
BRN/RED
YEL/GRN
BRN/YEL
RED/WHT
TAN
BLK
BLK
GRN/ORG
BLK/ORG
RED/YEL
GRN/BLK
BLU
RED/GRN
GRY/BLK
WHT/ORG
TO TACHO-METER
TO STOP LAMP SWITCH
WHT/ORG
AIR TEMPERATURE SENSOR
COOLANT TEMPERATURE SENSOR
TO CHECK ENGINE INDIC.
TO MAINT. REQUIRED INDIC.
BLU
TO DRL MODULE
BRN/RED
BRN
AUTOMATIC IDLE SPEED MOTOR
THROTTLE POSITION SENSOR
MANIFOLD ABSOLUTE PRESSURE SENSOR
SYNC SENSOR
BRN/RED
BRN/RED
POWER STEERING SWITCH
SPEED DISTANCE SENSOR
CRANK POSITION SENSOR
DISTRIBUTOR
BLK
SPARKPLUGS
SPARKPLUGS
BRN/RED